performance of MCBs and auxiliaries

■ Technical characteristics of auxiliaries

Max. connection cross-section: 2.5 mm ^{2}
Operating temperature: - 25 °C to + 70 °C

Shunt trips

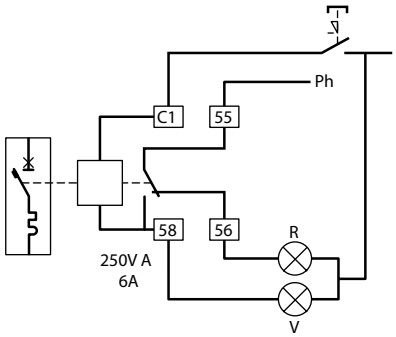

Nominal voltage (Un)
- 12 to 48 V ± and =
- 110 to 415 V ± and 110 to 125 V=

Equipped with a signalling contact which indicates tripping of the shunt trip and automatically breaks the coil.
Min. and max. voltage: 0.7 to 1.1 Un
Tripping time: less than 20 ms
Power consumption: at 1.1 x 48 V = 121 VA
at 1.1 x 415 V = 127 VA
Impedance: 12 to 48 V = 23 Ω
110 to 415 V = 1640 Ω

Consumption	Umin.	Umax.
12 to 48 V	522 mA	2610 mA
110 to 415 V	69 mA	259 mA

Undervoltage releases

Pull-in voltage ≥ 0.55 Un
Tripping time: 0 to 300 ms ± 10% (adjustable)
Power consumption: 24 V A and = : 0.1 VA
48 V A and = : 0.2 VA
230 V ± : 1 VA

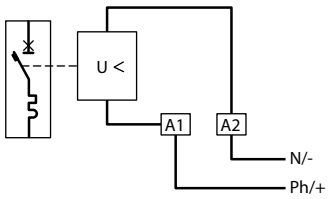

Nominal voltage:
24 and 48 V A and =
230 V ±

Stand-alone releases for N/C push-buttons

Min. and max. operating voltage: 196 to 250 V ±
Power consumption: 1.4 VA

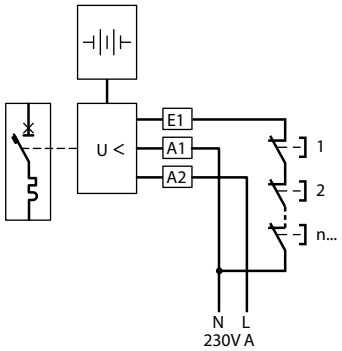

Signalling auxiliaries

Umin.: 24 V ± /= and Imin.: 5 mA